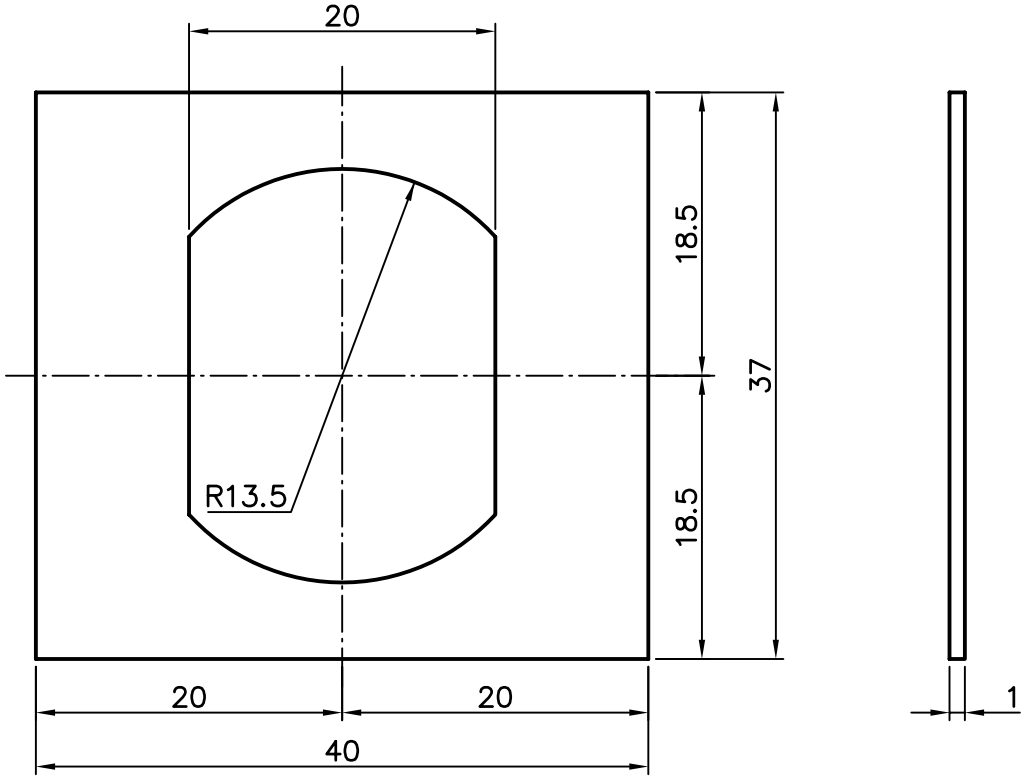
20
18.5
37
R13.5
18.5
20
20
40
1